AVANTI 15A block diagram .

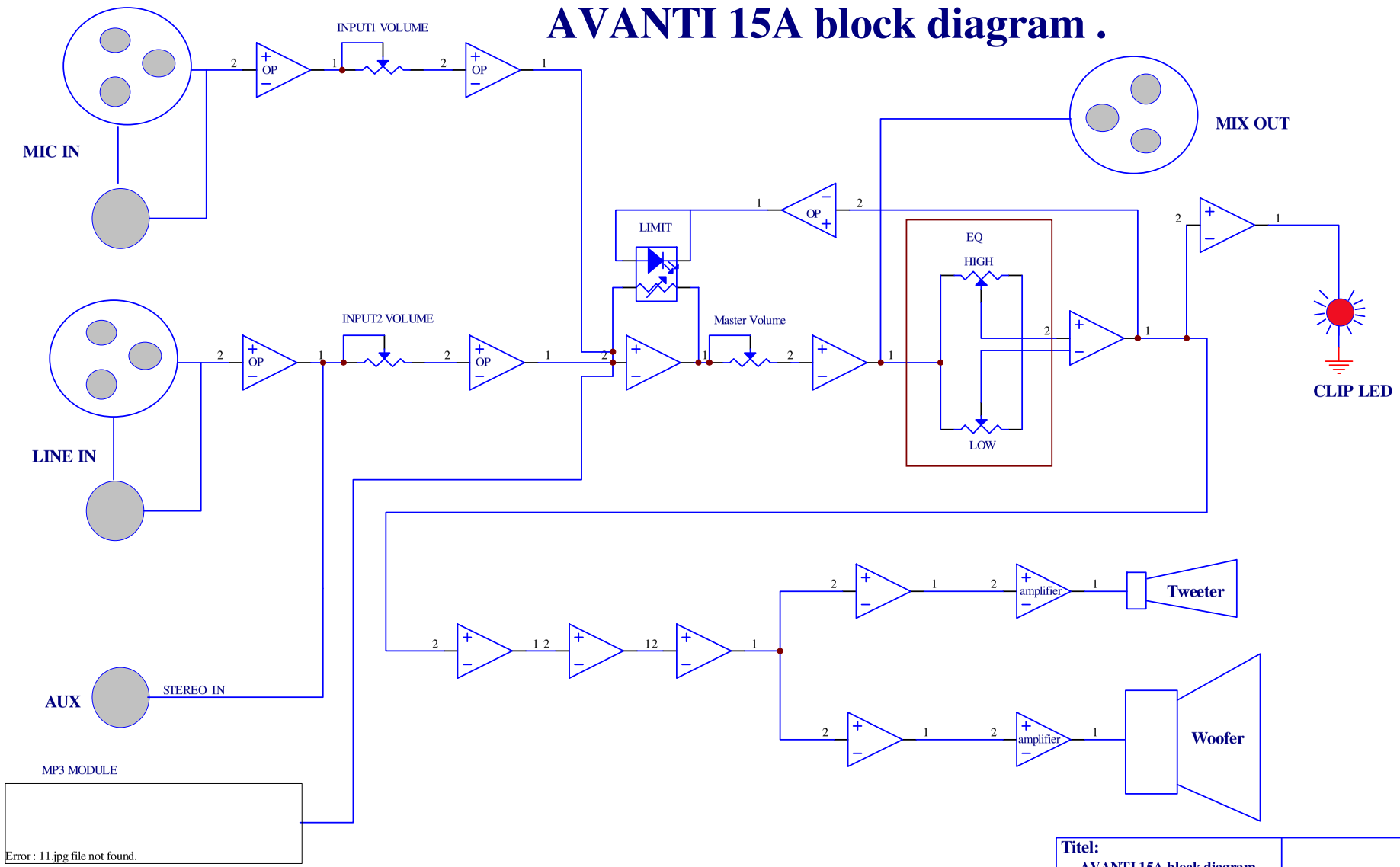

Titel: AVANTI 15A block diagram .		
Size: A3.	Model No: AVANTI 15A .	Revision: VER140813.
Date: 16-Nov-2014		Sheet : 1. of 1.
File:		Drawn By: jianjunzhou.

03-1

03-2

BLOCK DIAGRAM

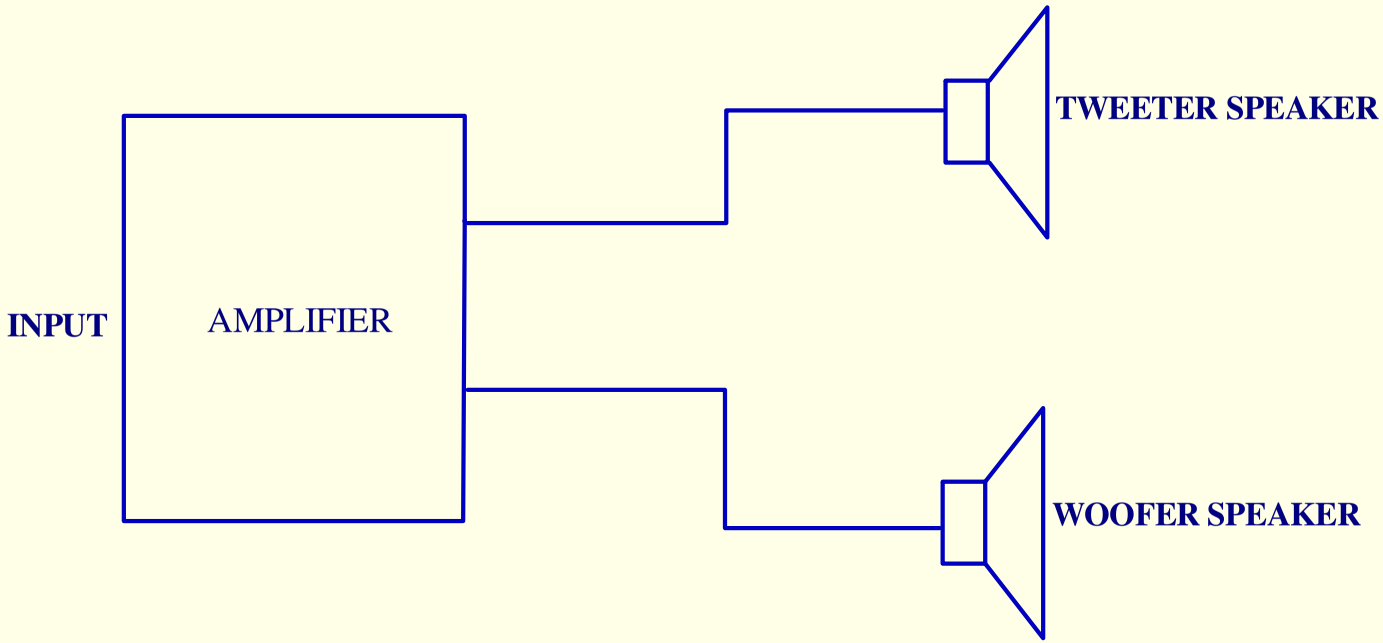

Titel:	AVANTI 15A		
Size: A4	Model No: AVANTI 15A		Revision:
Date:	20140328	Sheet: 1 of 1	
File:		Drawn By:	Zhihua Zhou

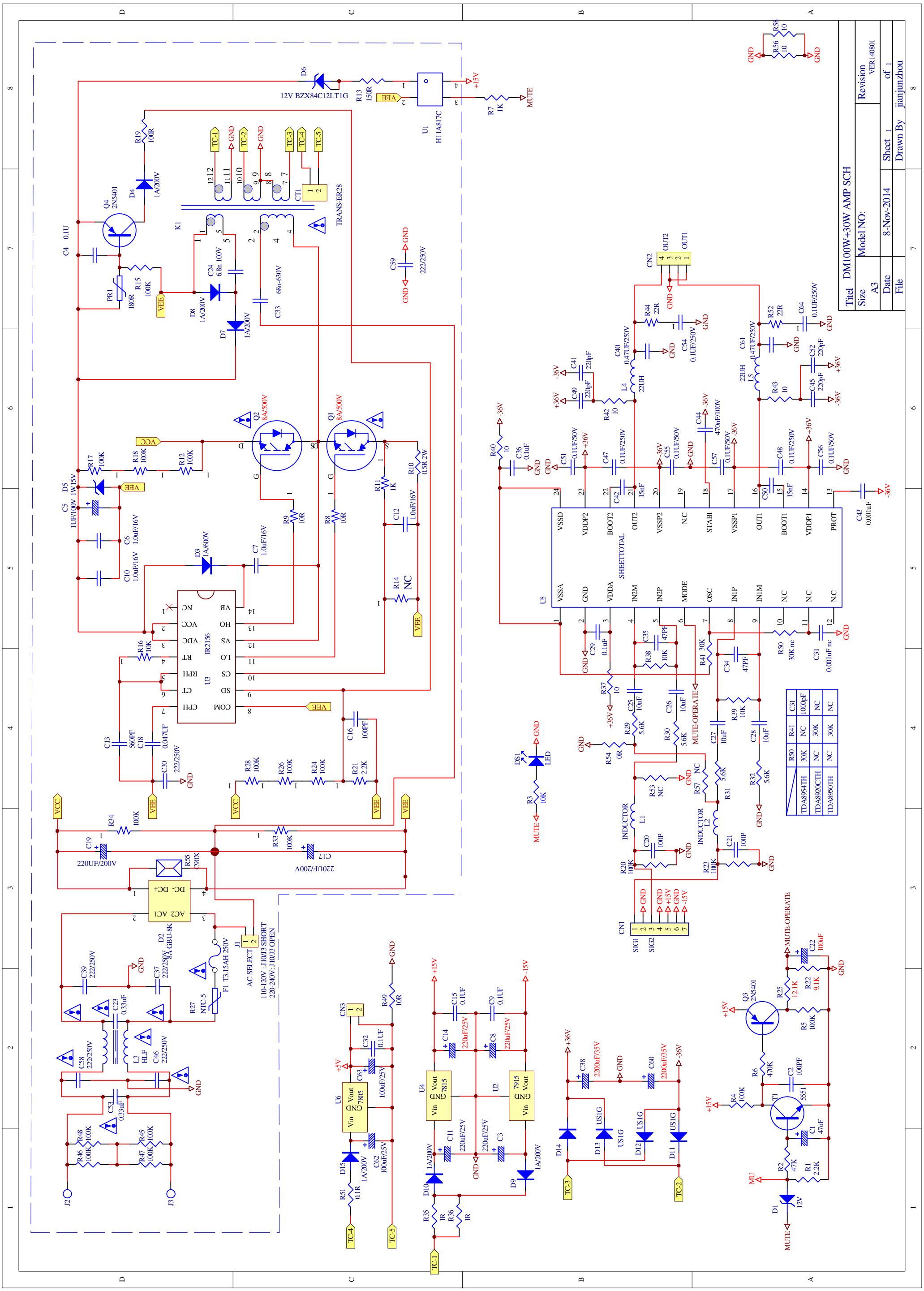
Titel DM100W+30W AMP SCH
Size A3
Model NO:
Revision VER140801
Date 8-Nov-2014
Sheet 1 of 1
Drawn By jianjunzhou
12V BZX84C12LT1G
U1 H11A817C
TRANS-ER28
IR2156
.SHEETTOTAL
INDUCTOR L1
INDUCTOR L2
MUTE-OPERATE
AC SELECT
110-120V : J10/J3 SHORT
220-240V: J10/J3 OPEN
TDA8954TH
TDA8920CTH
TDA8950TH

04-1

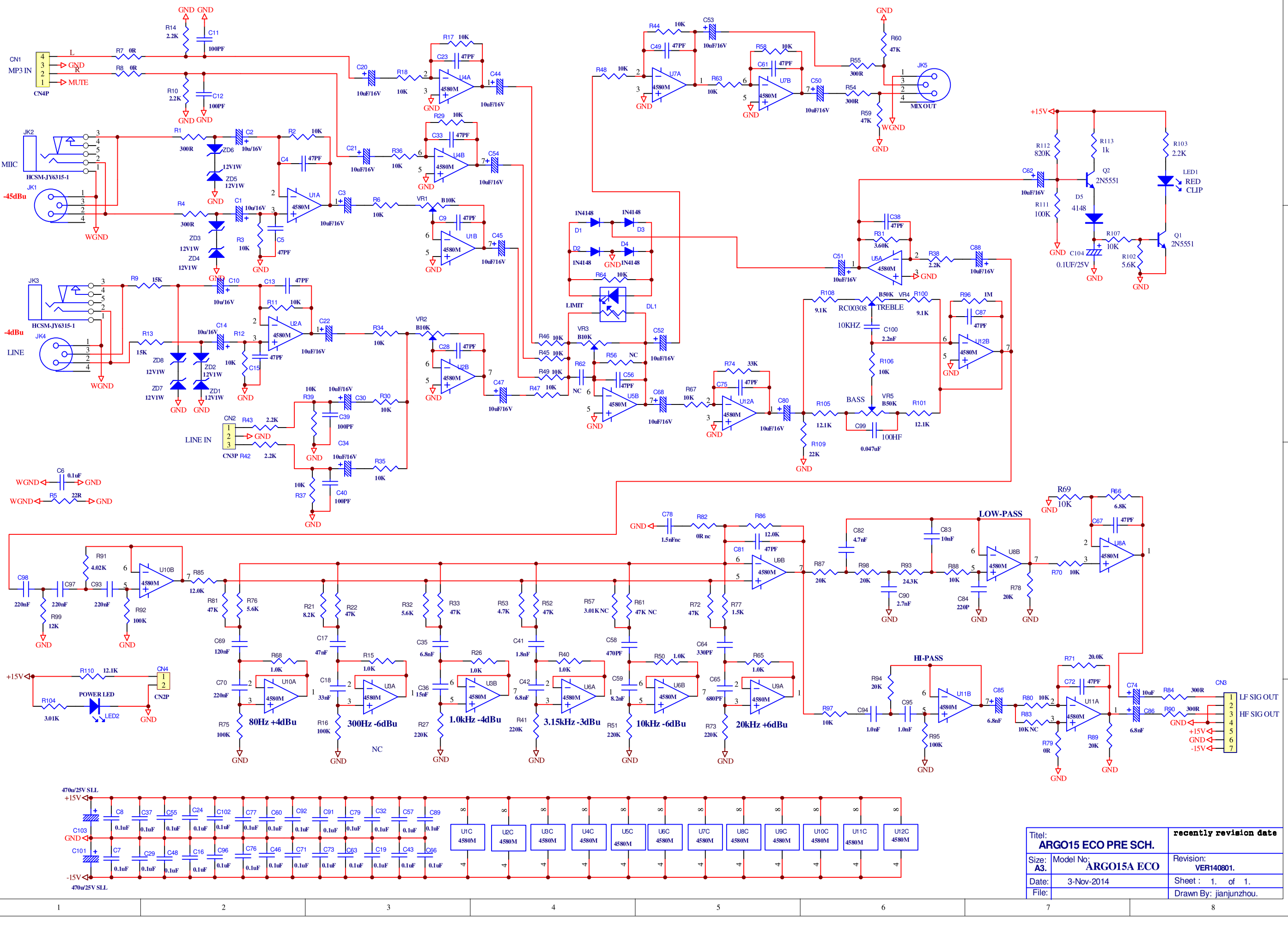

Titel: ARGO15 ECO PRE SCH.		recently revision date
Size: A3.	Model No: ARGO15A ECO	Revision: VER140801.
Date: 3-Nov-2014		Sheet : 1. of 1.
File:		Drawn By: jianjunzhou.

04-2

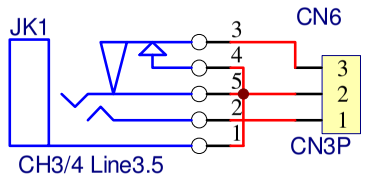

GND

Titel	LD Cubix 400 MIX-2.sch	
Size: A3	Model No: LD Cubix 400	Revision: VER140611
Date:	3-Nov-2014	Sheet 1 of 1
File:		Drawn By: jianjunzhou

05-1

AVANTI15A AMP 模組配線圖

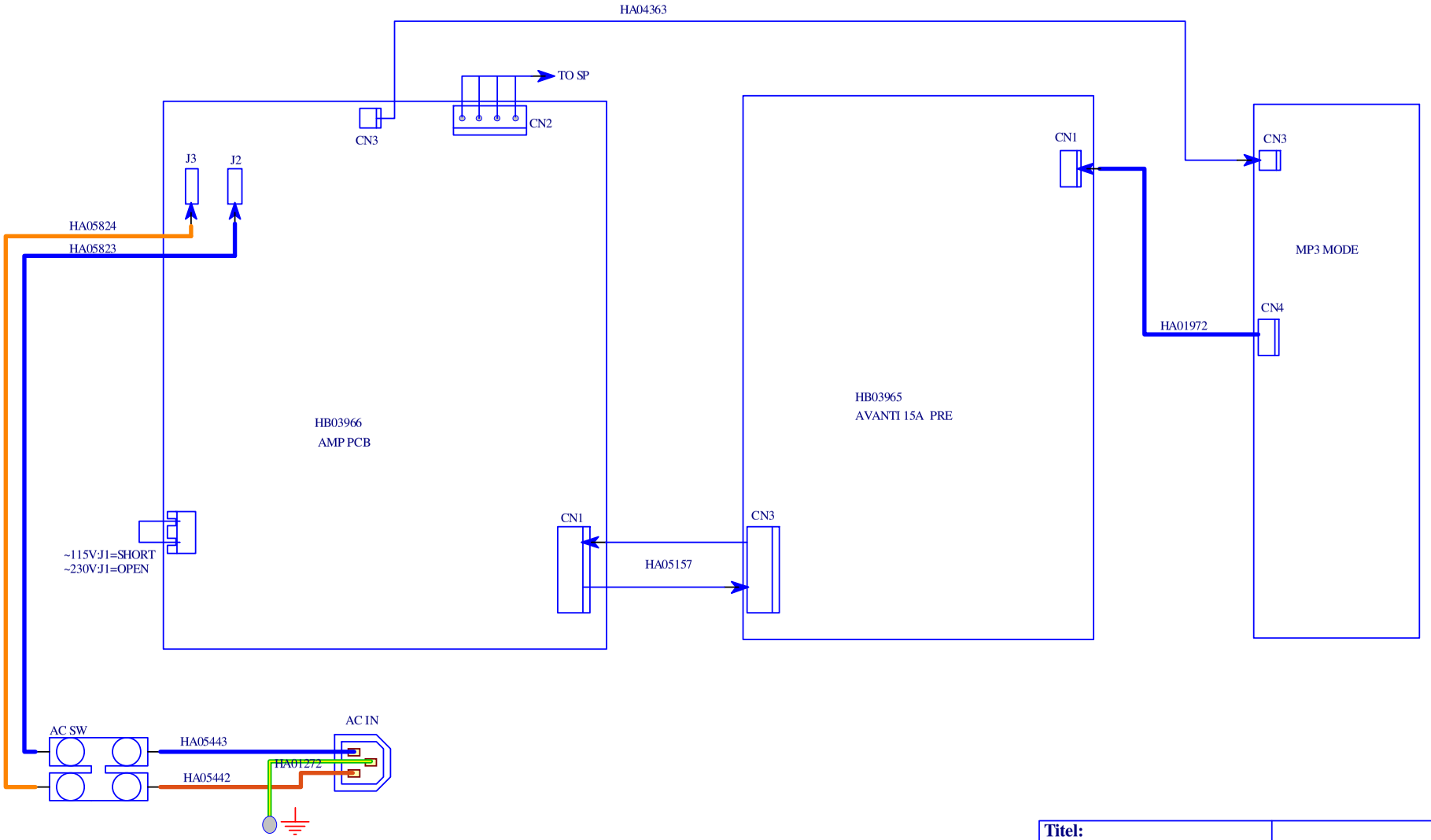

Titel: AVANTI15A AMP 模組配線圖		
Size: A3.	**Model No:** AVANTI 15A .	**Revision:** VER141116.
Date:	16-Nov-2014	**Sheet :** 1. of 1.
File:		**Drawn By:** jianjunzhou.

AVANTI 15A全機配線圖

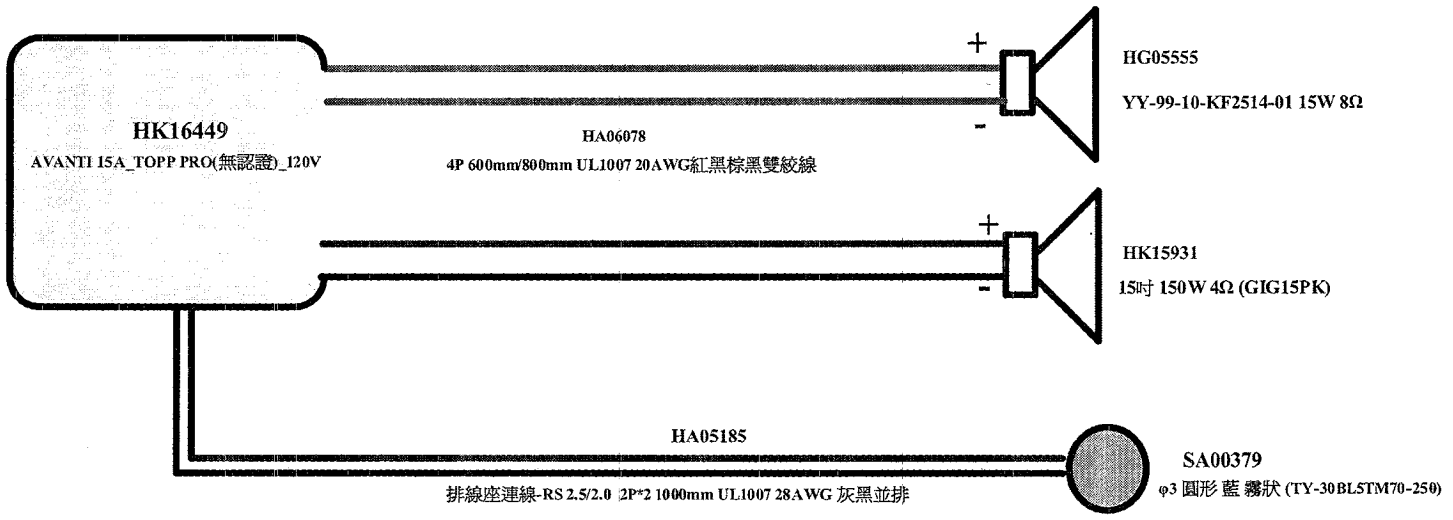

Titel	AVANTI 15 全機配線圖	
Size: A4	Model No.: AVANTI 15A	Revision: VER140910
Date: 14-NOV--2014	Sheet 1 of 1	
File: 全機配線圖	Drawn By: Zhihua Zhou	

05-2

Rank	Part No	Description	Specification	PCS	Remark
PC02637	PC02637	SPEAKER	AVANTI 15A_TOPP PRO_120V_CHINA	1.0000	
├0001	NI03275	stopper	18.36*15.9*9.1 black_V1.0	8.0000	
├0002	NI00246	sleeve	φ3*20mm	2.0000	
├0003	NI02728	rubber foot	φ29.5*14 black	4.0000	
├0004	NE11750	label-RS	ALTO PC_V1.2	3.0000	
├0005	ND00270	absorb sound sponge	700*430*50	0.5000	
├0006	ND00480	EV foam	2.0t*600*8mm black_V1.0	3.0000	
├0007	MG00034	screw	M4*16	4.0000	
├0008	MG01030	Screw-RS	M3*20	12.0000	
├0009	MG00437	screw	M3*16	4.0000	
├0010	MG01029	grew-RS	M6*30*1.0PH	4.0000	
├0011	MF00035	washer	φ6.7*φ10.6*0.5t	4.0000	
├0012	ME00014	color nut	6*1.0	4.0000	
├0013	MG01032	Screw-RS	M4*41	14.0000	
├0014	HA01429	wire-RS	2P 795mm UL1007 24AWG	1.0000	
├0015	HA00841	power cord(America 3P)	LT-202+18A*3C(SVT) 6FT+LT-501	1.0000	
├0016	NI04135	drop glue nameplate	TOPP PRO_V1.1	1.0000	
├0017	MG00751	screw-RS	M4*20MM	4.0000	
├0018	NA00861	PE bag-RS	0.04t*350*230mm_V1.0	1.0000	
├0019	NA00880	PE bag-RS	0.03t*1200*800mm12 hole	1.0000	
├0020	MF00032	washer	φ6.3*φ11*0.8t_V1.0	4.0000	
├0021	SA00379	L.E.D-RS	φ3 blue(TY-30BL5TM70-250)	1.0000	
├0022	HG00555	speaker-RS	YY-99-10-KF2514-01 15W 8Ω	1.0000	
├0023	MG00838	screw-RS	FLASH12 φ30.5*51.5_V1.0	1.0000	
├0024	MD01828	iron net-RS	WD(A)200 1.0t*φ344*10_V1.0	1.0000	
├0025	NA01434	sponge-RS	SPLASH 15A(up)_V1.0	1.0000	
├0026	NA01435	sponge-RS	SPLASH 15A(down)_V1.0	1.0000	
├0027	MG00995	screw-RS	M5*25(441135025)_V1.0	6.0000	
├0028	NI07290	panel-RS	TX15 624.9*385.9*160 black_V1.0	1.0000	
├0029	NI07292	rear cover-RS	TX15 625*386*286 black_V1.0	1.0000	
├0030	NI07155	handle cover-RS	SP-15A 145.8*50.6*10.8 black_V1.0	2.0000	
├0031	NI07154	handle-RS	SP-15A 218.2*56.9*13 black_V1.0	2.0000	
├0032	NE24150	label-RS	T15150 4Ω-SPK TOPP PRO_V1.1	1.0000	
├0033	HK16449	faceplate-RS	AVANTI 15A_TOPP PRO_120V	1.0000	
│ ├0001	MA10554	panel-RS	AVANTI 15A TOPP PRO_V1.1	1.0000	
│ ├0002	MI05969	fixed board-RS	WD(A)200 2.5t*40*15_V1.1	1.0000	
│ ├0003	NI02527	knob-RS	φ14*13mm_V1.3	5.0000	
│ ├0004	NI00218	cable tie	ALT-102SB	5.0000	
│ ├0005	NC03655	insulator-RS	0.3t*20*15mm	1.0000	
│ ├0006	NI07386	barrier-RS	AVANTI-15A 0.5t*109*97.1_V1.0	1.0000	
│ ├0007	ME00016	color nut	4m/m	1.0000	
│ ├0008	ME00057	nut-RS	φ8*1.5t	1.0000	
│ ├0009	ME00060	MIC jack	JY-6351G-02-250	2.0000	
│ ├0010	MF00038	washer-RS	φ4*φ7*1t	1.0000	
│ ├0011	MF00048	washer-RS	φ4*φ8*0.5t	1.0000	
│ ├0012	MF00014	washer	φ3*φ6.5*0.5t	8.0000	
│ ├0013	MF00061	MIC jack	φ9.6*φ13*0.5t	2.0000	
│ ├0014	MG00061	screw-RS	M3*10(加硬處理)	6.0000	
│ ├0015	MG00042	screw	M3*10	2.0000	
│ ├0016	MG00162	screw	M3*8	11.0000	
│ ├0017	HI00019	power switch	4P MSR-8	1.0000	
│ ├0018	HD00013	glass tube fuse	3.15A 250V φ5*20mm CSA/S/UL/VDE	2.0000	
│ ├0019	HA05157	wire-RS	7P-7P 100mm UL1007 26AWG	1.0000	
│ ├0020	HA04363	wire-RS	2P-2P 300mm UL1007 26AWG red/white	1.0000	
│ ├0021	HA01972	wire-RS	4P-4P 110mm UL1007 28AWG	1.0000	
│ ├0022	HA05823	wire-RS	120mm UL1617 18AWG blue	1.0000	
│ ├0023	HA05824	wire-RS	120mm UL1617 18AWG grew	1.0000	
│ ├0024	HA01272	signle terminal wiring	90mm UL1015 18AWG	1.0000	
│ ├0025	HE00345	MP3 Player-RS	VTF-108BT(FM)	1.0000	
│ ├0026	HK16452	PC board-RS	P-AVANTI15A PRE-DIP	1.0000	
│ │ ├0001	RC01006	potentiometer-RS	B10KΩ RA0901NC0Q-HA1- B103FA26.5B12	3.0000	VR1,VR2,VR3
│ │ ├0002	RC00308	potentiometer	B50KΩ R0911NOB	2.0000	VR4,VR5
│ │ ├0003	HC00065	connector(male)	2P 2.5mm 90 °	1.0000	CN4
│ │ ├0004	HC00077	connector(male)	3P 2.5mm 180 °	1.0000	CN2
│ │ ├0005	HC00258	connector(male)	7P 2.0mm 180 °	1.0000	CN3
│ │ ├0006	HC00255	connector(male)	4P 2.0mm 180 °	1.0000	CN1

Rank	Part No	Description	Specification	PCS	Remark
├0007	HC00371	MIC jack	SCJ-0658-1-Y	2.0000	JK2,JK3
├0008	HC00126	balance MIC jack-RS	JY-5042-030G female plug 180 °	2.0000	JK1,JK4
├0009	HC00392	balance MIC jack-RS	JY-5030-030G 180 °	1.0000	JK5
├0010	HK07274	Photodiode	P-photosensitive resistance+φ3lled	1.0000	DL1
├0001	RH00020	photosensitive resistance	VT90N1	1.0000	
├0002	SA00305	L.E.D-RS	φ3 circle red high intensity	1.0000	
└0003	NI02405	sleeve	φ5*15mm	1.0000	
├0011	SA00052	L.E.D	φ3 round(green)long foot 26	1.0000	LED2
├0012	SA00053	L.E.D	φ3 round(red)long foot 26mm	1.0000	LED1
├0013	NI02532	LED spacer support	LEDS-22 22mm	2.0000	LED1,LED2
├0014	CB00065	electrolytic capacitor	470uF/25V φ10*16mm	2.0000	C101,C103
├0015	AC00603	lead free soldering bar	S100	3.5460	
└0016	HK16565	PC board-RS	P-AVANTI 15A PRE-AI	1.0000	
├0001	CB00263	electrolytic capacitor	10uF /25V φ4*7mm	23.0000	C1,C2,C3,C10,C14,C20,C21,C22,C30,C34,C44,C45,C47,C50,C51,C52,C53,C54,C62,C68,C74,C80,C88
└0002	HK16454	PC board-RS	P-AVANTI15A PRE-SMD	1.0000	
0001	RD00541	SMD precise resistance 1/10W	0Ω ±1% 0603	3.0000	R7,R8,R79
0002	RD00282	SMD precise resistor 1/10W	1.00KΩ ±1% 0603	7.0000	R15,R26,R40,R50,R65,R68,R113
0003	RD00201	SMD precise resistor 1/10W	1.50KΩ ±1% 0603	1.0000	R77
0004	RD00224	SMD precise resistor 1/10W	100KΩ ±1% 0603	5.0000	R16,R75,R92,R95,R111
0005	RD00214	SMD precise resistor 1/10W	10.0KΩ ±1% 0603	29.0000	R2,R3,R6,R11,R12,R18,R30,R34,R35,R36,R37,R39,R44,R45,R46,R47,R48,R49,R58,R63,R64,R67,R69,R70,R80,R88,R97,R106,R107
0006	RD00301	SMD precise resistor 1/10W	12.1KΩ ±1% 0603	6.0000	R85,R86,R99,R101,R105,R110
0007	RD00218	SMD precise resistor 1/10W	15.0KΩ ±1% 0603	2.0000	R9,R13
0008	RD00483	SMD precise resistor 1/10W	16.0KΩ ±1% 0603	1.0000	R94
0009	RD00125	SMD fixed resistor 1/10W	1.0MΩ ±5% 0603	1.0000	R96
0010	RD00392	SMD precise resistor 1/10W	2.20KΩ ±1% 0603	6.0000	R10,R14,R38,R42,R43,R103
0011	RD00219	SMD precise resistor 1/10W	20.0KΩ ±1% 0603	5.0000	R71,R78,R87,R89,R98
0012	RD00461	SMD precise resistor 1/10W	220KΩ ±1% 0603	4.0000	R27,R41,R51,R73
0013	RD00928	SMD precise resistor 1/10W	22.0KΩ ±1%0603	1.0000	R109
0014	RD00448	SMD precise resistor 1/10W	24.3KΩ ±1% 0603	1.0000	R93
0015	RD00385	SMD precise resistor 1/10W	3.01KΩ ±1% 0603	1.0000	R104
0016	RD00278	SMD precise resistor 1/10W	301Ω ±1% 0603	6.0000	R1,R4,R54,R55,R84,R90
0017	RD00525	SMD precise resistor 1/10W	33.0KΩ ±1% 0603	1.0000	R74
0018	RD00364	SMD precise resistor 1/10W	4.02KΩ ±1% 0603	1.0000	R91
0019	RD00339	SMD precise resistor 1/10W	47.0KΩ ±1% 0603	7.0000	R22,R33,R52,R59,R60,R72,R81
0020	RD00326	SMD precise resistor 1/10W	6.80KΩ ±1% 0603	1.0000	R66
0021	RD00822	SMD precise resistor 1/10W	5.60KΩ ±1% 0603	3.0000	R32,R76,R102
0022	RD00406	SMD precise resistor 1/10W	3.60KΩ ±1% 0603	1.0000	R31
0023	RD00415	SMD precise resistor 1/10W	4.70KΩ ±1% 0603	1.0000	R53
0024	RD00327	SMD precise resistor 1/10W	8.20KΩ ±1% 0603	1.0000	R21
0025	RD00124	SMD fixed resistor 1/10W	820KΩ ±5% 0603	1.0000	R112
0026	RD00338	SMD precise resistor 1/10W	9.10KΩ ±1% 0603	2.0000	R100,R108
0027	CI00055	SMD ceramic capacitor 0603	47PF/50V C0G±5%(C1608C0G1H470JT)/TDK	17.0000	C4,C5,C9,C13,C15,C23,C28,C33,C38,C49,C56,C61,C67,C72,C75,C81,C87
0028	CI00217	SMD ceramic capacitor 0603	100PF/50V C0G ±5%(C1608C0G1H101JT)/TDK	4.0000	C11,C12,C39,C40
0029	CI00222	SMD ceramic capacitor 0603	330PF/50V C0G ±5%(C1608C0G1H331JT)/TDK	1.0000	C64
0030	CI00253	SMD ceramic capacitor-RS 0402	220PF/50V C0G±5%(C1005C0G1H221JT)/TDK	1.0000	C84
0031	CI00226	SMD ceramic capacitor 0603	680PF/50V C0G ±5%(C1608C0G1H681JT)/TDK	1.0000	C65
0032	CI00228	SMD ceramic capacitor 0603	0.001uF/50V C0G±5%(C1608C0G1H102JT)/TDK	2.0000	C94,C95
0033	CI00231	SMD ceramic capacitor 0603	0.0018uF/50VC0G±5%(C1608C0G1H182JT)/TDK	1.0000	C41
0034	CI00232	SMD ceramic capacitor 0603	0.0022uF/50VC0G±5%(C1608C0G1H222JT)/TDK	1.0000	C100
0035	CI00233	SMD ceramic capacitor 0603	0.0027uF/50VC0G±5%(C1608C0G1H272JT)/TDK	1.0000	C90
0036	CI00198	SMD ceramic capacitor 0603	0.0047uF/50V ±10%(C1608X7R1H472KT)/TDK	1.0000	C82
0037	CI00200	SMD ceramic capacitor 0603	0.0068uF/50V ±10%(C1608X7R1H682KT)/TDK	4.0000	C35,C42,C85,C86
0038	CI00201	SMD ceramic capacitor 0603	0.01uF/50V ±10%(C1608X7R1H103KT)/TDK	1.0000	C83
0039	CI00202	SMD ceramic capacitor 0603	0.015uF/50V ±10%(C1608X7R1H153KT)/TDK	1.0000	C36
0040	CI00148	SMD ceramic capacitor 0603	0.033uF/50V X7R±10%(C1608X7R1H333KT)/TDK	1.0000	C18
0041	CI00206	SMD ceramic capacitor 0603	0.047uF/50V ±10%(C1608X7R1H473KT)/TDK	2.0000	C17,C99
0042	CI00185	SMD ceramic capacitor 0603	0.1uF/50V X7R±10%(C1608X7R1H104KT)/TDK	27.0000	C6,C7,C8,C16,C19,C24,C29,C32,C37,C43,C46,C48,C55,C57,C60,C63,C66,C71,C73,C76,C77,C79,C89,C91,C92,C96,C102
0043	CI00210	SMD ceramic capacitor 0603	0.12uF/16V X7R±10%(C1608X7R1C124KT)/TDK	1.0000	C69
0044	CI00179	SMD ceramic capacitor 0603	0.22uF/25V X7R±10%(C1608X7R1E224KT)/TDK	4.0000	C70,C93,C97,C98
0045	RD00131	SMD fixed resistor 1/4W	22Ω ±5% 1206	1.0000	R5
0046	SE00177	SMD rectifier diode-RS	0.5A LL4148(SOD-80)/(VISHAY)	5.0000	D1,D2,D3,D4,D5
0047	SE00153	SMD zener diode-RS	1/2W 12V BZV55-C12 (SOD80C)/(NXP)	8.0000	ZD1,ZD2,ZD3,ZD4,ZD5,ZD6,ZD7,ZD8
0048	SG00122	SMD integrated circuit-RS-ACT	NJM4580M-TE3(DMP8)/(JRC)	12.0000	U1,U2,U3,U4,U5,U6,U7,U8,U9,U10,U11,U12
0049	SF00083	transistor	MMBT5551LT1G(SOT23)/(ON)	2.0000	Q1,Q2

Rank	Part No	Description	Specification	PCS	Remark
0050	AE00553	SenJu solder paste	M705-GRN360-K2-V 0.5KG/bottle	0.6312	
0051	HB03965	PCB-RS	AVANTI15A PRE(1*2)_VER140814	1.0000	
0052	RD00286	SMD precise resistor 1/10W	4.53KΩ ±1% 0603	2.0000	R17,R29
├0027	HK16453	PC board-RS	P-DM90W+30W_M AMP 230V-DIP	1.0000	
│ ├0001	HA01927	jump-RS	11mm	1.0000	J6
│ ├0002	HA01925	jump	10mm	2.0000	J4,J5
│ ├0003	HC00253	connector(male)	2P 2.0mm 180 °	1.0000	CN3
│ ├0004	HC00258	connector(male)	7P 2.0mm 180 °	1.0000	CN1
│ ├0005	HC00174	connector(male)	4P 3.96mm 180 °	1.0000	CN2
│ ├0006	HC00410	terminal block	ELK508V-02P PH5mm	1.0000	J1
│ ├0007	HC00324	connect terminal	6.5m/m (PC250)	2.0000	J2,J3
│ ├0008	TC00513	Transistor-RS	PT-KICK12 AMP-ER282305_230V	1.0000	K1
│ ├0009	RA00073	metal-oxide-film resistor 3W	0.22Ω RSS P type	1.0000	R10
│ ├0010	CN00278	color number inductance-RS	22uH DASM1620 (998AMF-134)/(TOKO)	2.0000	L4,L5
│ ├0011	SA00316	bridge rectifier-RS	8A GBU-8K/(PANJIT)	1.0000	D2
│ ├0012	CF00285	metal-film capacitor-RS	0.068uF/630V C822J683J60C000/(Fara)	1.0000	C33
│ ├0013	SB00363	transistor-RS	AOT8N50(TO220)/(AOS)	2.0000	Q1,Q2
│ ├0014	SB00012	Pohtotriode-RS-ACT	H11A817C.300/(QT)	1.0000	U1
│ ├0015	CG00023	X1/Y1 capacitor	0.0022uF/250VAC Y5U	6.0000	C30,C37,C39,C46,C58,C59
│ ├0016	CB00378	electrolytic capacitor-RS	220uF/200V 105℃ φ18*30mm (SAMXON)	2.0000	C17,C19
│ ├0017	CB00136	electrolytic capacitor	2200uF/50V φ18*25mm	2.0000	C38,C60
│ ├0018	MF00037	washer	φ3.2*φ5*0.8t	2.0000	Q1,Q2
│ ├0019	MG00162	screw	M3*8	2.0000	Q1,Q2
│ ├0020	AC00603	lead free soldering bar	S100	2.9880	
│ ├0021	HK16611	PC board-RS	P-DM90W+30W_M AMP-AI	1.0000	
│ │ ├0001	CB00276	electrolytic capacitor	220uF/25V φ6.3*11mm 5mm	4.0000	C3,C11,C8,C14
│ │ ├0002	CB00410	electrolytic capacitor-RS	100uF/25V 105℃ φ6.3*11mm	3.0000	C22,C62,C63
│ │ ├0003	CB00146	electrolytic capacitor	47uF/25V 105℃φ5*11mm 2.5MM	1.0000	C1
│ │ ├0004	HK16455	PC board-RS	P-DM90W+30W_M AMP-SMD	1.0000	
0001	CO00168	SMD inductance-RS-ACT	1000Ω±25%(BLM18RK102SN1D)	2.0000	L1,L2
0002	RD00059	SMD fixed resistor 1/10W	0.0Ω ±5% 0603	1.0000	R54
0003	RD00329	SMD precise resistor 1/10W	30.0KΩ ±1% 0603	1.0000	R41
0004	RD00123	SMD fixed resistor 1/10W	470KΩ ±5% 0603	1.0000	R6
0005	RD00339	SMD precise resistor 1/10W	47.0KΩ ±1% 0603	1.0000	R2
0006	RD00224	SMD precise resistor 1/10W	100KΩ ±1% 0603	9.0000	R4,R5,R15,R20,R23,R45,R46,R47,R48
0007	RD00274	SMD precise resistor 1/10W	100Ω ±1% 0603	1.0000	R19
0008	RD00214	SMD precise resistor 1/10W	10.0KΩ ±1% 0603	4.0000	R3,R16,R38,R39
0009	RD00822	SMD precise resistor 1/10W	5.60KΩ ±1% 0603	4.0000	R29,R30,R31,R32
0010	RD00338	SMD precise resistor 1/10W	9.10KΩ ±1% 0603	1.0000	R22
0011	RD00301	SMD precise resistor 1/10W	12.1KΩ ±1% 0603	1.0000	R25
0012	RD00392	SMD precise resistor 1/10W	2.20KΩ ±1% 0603	2.0000	R1,R21
0013	RD00282	SMD precise resistor 1/10W	1.00KΩ ±1% 0603	2.0000	R7,R11
0014	RD00858	SMD fixed resistor-RS 1/4W	0.01Ω ±1% 1206	3.0000	R35,R36,R56
0015	RD00130	SMD fixed resistor 1/4W	10Ω ±5% 1206	6.0000	R8,R9,R37,R40,R42,R43
0016	RD00255	SMD precise resistor 1/4W	100KΩ ±1% 1206	8.0000	R12,R17,R18,R24,R26,R28,R33,R34
0017	RD00516	SMD precise resistor 1/4W	150Ω ±1% 1206	1.0000	R13
0018	RD00667	SMD fixed resistor-RS	22Ω ±5% 2512	2.0000	R44,R52
0019	RD00728	SMD fixed resistor-RS	0.2Ω±5% 2512	1.0000	R51
0020	CI00268	SMD ceramic capacitor-RS 0603	47PF/50V NPO ±5%	2.0000	C34,C35
0021	CI00217	SMD ceramic capacitor 0603	100PF/50V C0G ±5%(C1608C0G1H101JT)/TDK	3.0000	C2,C20,C21
0022	CI00096	SMD ceramic capacitor 0603	560PF/50V NPO ±5%	1.0000	C13
0023	CI00093	SMD ceramic capacitor 0603	0.015uF/50V X7R ±10%	2.0000	C42,C50
0024	CI00206	SMD ceramic capacitor 0603	0.047uF/50V ±10%(C1608X7R1H473KT)/TDK	1.0000	C18
0025	CI00185	SMD ceramic capacitor 0603	0.1uF/50V X7R±10%(C1608X7R1H104KT)/TDK	5.0000	C4,C9,C15,C16,C32
0026	CI00175	SMD ceramic capacitor 0603	1.0uF/16V X7R±10%(C1608X7R1C105KT)/TDK	1.0000	C12
0027	CI00018	SMD ceramic capacitor 0805	220PF/50V NPO ±5%	4.0000	C41,C45,C49,C52
0028	CI00100	SMD ceramic capacitor 0805	0.1uF/50V X7R ±10%	6.0000	C29,C36,C51,C55,C56,C57
0029	CI00330	SMD ceramic capacitor-RS 0805	10uF/16V±10%(GRM21BB31C106K)/(MURATA)	4.0000	C25,C26,C27,C28
0030	CI00393	electrolytic capacitor-RS	0.47uF/50V X7R ±10%	1.0000	C44
0031	CI00356	SMD ceramic capacitor 1206	0.1uF/250V X7R ±10%(GRM31CR72E104KW03L)	4.0000	C47,C48,C54,C64
0032	CI00405	SMD ceramic capacitor-RS 1206	1.0uF/50V X7R ±10%	4.0000	C5,C6,C7,C10
0033	CI00354	SMD ceramic capacitor 1210	0.47uF/100V X7R ±10%	2.0000	C40,C61
0034	SE00038	SMD L.E.D	green KPJA-2107SGD 90 °0802	1.0000	DS1
0035	SE00133	SMD zener diode-RS	225mW 12V BZX84C12LT1G(SOT23)	1.0000	D6
0036	SE00243	SMD zener diode-RS	1/2W 12V MMSZ5242A(SOD123)/PANJIT	1.0000	D1
0037	SE00156	SMD diode-RS-ACT	1A/200V ES1D(SMA)/(FAIRCHILD)	6.0000	D4,D7,D8,D9,D10,D15

Rank	Part No	Description	Specification	PCS	Remark
0038	SE00121	SMD diode-RS	2A/200V MURS220T3G(DO214AA)/(ON)	4.0000	D11,D12,D13,D14
0039	SE00134	SMD rectifier diode-RS-ACT	1A 600V MURS160T3G (SMB)/(ON)	1.0000	D3
0040	SE00098	SMD zener diode-RS-C	1W 15V DL4744A MELF/(SJ)	1.0000	D5
0041	SF00082	transistor-RS-ACT	MMBT5401LT1G(SOT23)/(ON)	2.0000	Q3,Q4
0042	SF00083	transistor	MMBT5551LT1G(SOT23)/(ON)	1.0000	T1
0043	SF00103	voltage stabilized transistor-RS-CT	MC78M05CDT (DPAK3)/(ON)	1.0000	U6
0044	SG00862	SMD integrated circuit-RS-ACT	MC78M15BDTRKG(DPAK-3)/(ON)	1.0000	U4
0045	SG00863	SMD integrated circuit-RS-ACT	MC79M15BDTRKG(DPAK-3)/(ON)	1.0000	U2
0046	SG00495	SMD integrated circuit-RS	IR2156SPBF(SO14)/(IR)	1.0000	U3
0047	SG00749	SMD integrated circuit-RS-ACT	TDA8950TH(SOT566-3)/(NXP)	1.0000	U5
0048	AE00553	SenJu solder paste	M705-GRN360-K2-V 0.5KG/bottle	0.4944	
0049	HB03966	PCB-RS	DM120W+30W_M AMP(1*2)_VER141016	1.0000	
0050	CI00228	SMD ceramic capacitor 0603	0.001uF/50V C0G±5%(C1608C0G1H102JT)/TDK	1.0000	C43
└0005	CF00148	metal-film capacitor	0.0033uF/100V 5% CASE01	1.0000	C24
├0022	MI00256	heat-sink	25*15*10.6-1PIN SCL-2020	2.0000	Q1,Q2
├0023	RH00033	thermistor-RS-CT	5Ω B57235S-0509M000/(EPCOS)	1.0000	R27
├0024	RH00037	thermistor-RS-ACT	330Ω PTFL04BG222Q2N34B0/(MURATA)	1.0000	PR1
├0025	NI00224	sleeve	φ1*10mm	2.0000	
└0026	CG00110	X2 capacitor-RS	0.33uF/275V ±10% VDE/UL/CSA	2.0000	C23,C53
├0028	HK16457	PC board-RS	P-Stereo3.5JK-DIP	1.0000	
├0001	HC00202	stereo headphone jack	φ3.5 SJ-500-0	1.0000	JK1
├0002	HA01395	wire-RS	3P 50mm UL1007 24AWG	1.0000	CN6
├0003	AC00603	lead free soldering bar	S100	0.1980	
└0004	HB03967	PCB-RS	Stereo3.5JK(5*9)_VER140815	1.0000	
├0029	MG00020	screw	M3*8	2.0000	
├0030	HA00481	wire-RS	30mm brown L5R5	1.0000	
├0031	HC00008	AC socket	3515 A TYPE(RF-2004-C-4.8)	1.0000	
├0032	HA04143	wire	100mm UL1015 18AWG brown	1.0000	
└0033	HA04141	wire	100mm UL1015 18AWG blue	1.0000	
├0034	HA06078	wire-RS	4P 600/800mm UL1007 20AWG	1.0000	
├0035	HK15931	SPEAKER	15inch 150W 4Ω (GIG15PK)	1.0000	
├0001	NH00233	cover-RS	φ109.4*20 凸帽_V1.0	1.0000	
├0002	ND00227	sponge	S0721B_NYLON NET D35	1.0000	
├0003	MG00599	screw	M5*6*0.8PH_V1.1	4.0000	
├0004	MH02056	magnet-RS	ψ135*ψ57*19 Y30_V1.0	1.0000	
├0005	HA04623	line-RS	AG6X4YKA42W*2*180mm	2.0000	
├0006	ND01185	spider-RS	φ122.5*50.8*15 0.6/100g LK:D-1225_V1.0	1.0000	
├0007	NE23836	label-RS	HK15931_V1.0	1.0000	
├0008	MH02653	iron coil-RS	φ115*52.6*6 P:90mm_V1.0	1.0000	
├0009	MH02607	T-shape middle pillar-RS	φ115*49.95*26*6 P:56_V1.1	1.0000	
├0010	NH00733	cushion-RS	φ378*φ351*8 EVA+A_V1.0	1.0000	
├0011	NH00734	cushion-RS	φ378*φ351*8 EVA+B_V1.0	1.0000	
├0012	HG00533	voice coil-RS	KSV50.5*38*3.2Ω*0.28 11.3mm_V1.0	1.0000	
├0013	NH00720	cone-RS	φ374*52*93H TL:YD380-14_V1.0	1.0000	
├0014	MI05999	bracket-RS	ψ379.3*72*111.8 P:90 DK:380-91_V1.0	1.0000	
└0015	HC00426	terminal-RS	M0021B_PT2.1_V1.0	1.0000	
├0036	NI00218	cable tie	ALT-102SB	1.0000	
├0037	ND01426	wind-proof sponge-RS	3.0t*210*25mm 1944-04180	1.0000	
├0038	NF04276	user manual-RS	AVANTI 15A TOPP PRO_V1.1	1.0000	
├0039	NB08360	carton-RS	AVANTI 15A TOPP PRO_V1.1	1.0000	
├0040	MG01038	screw	M4*5mm	1.0000	
├0041	MI06058	heat-sink-RS	SP-12A 4*34.5*16.5*36_V1.0	1.0000	
├0042	ND01443	EV foam-RS	2.0t*210*3mm Black_V1.0	2.0000	
└0043	NC04664	front faceplate	XP115A 18t*90*45_V1.0	1.0000	